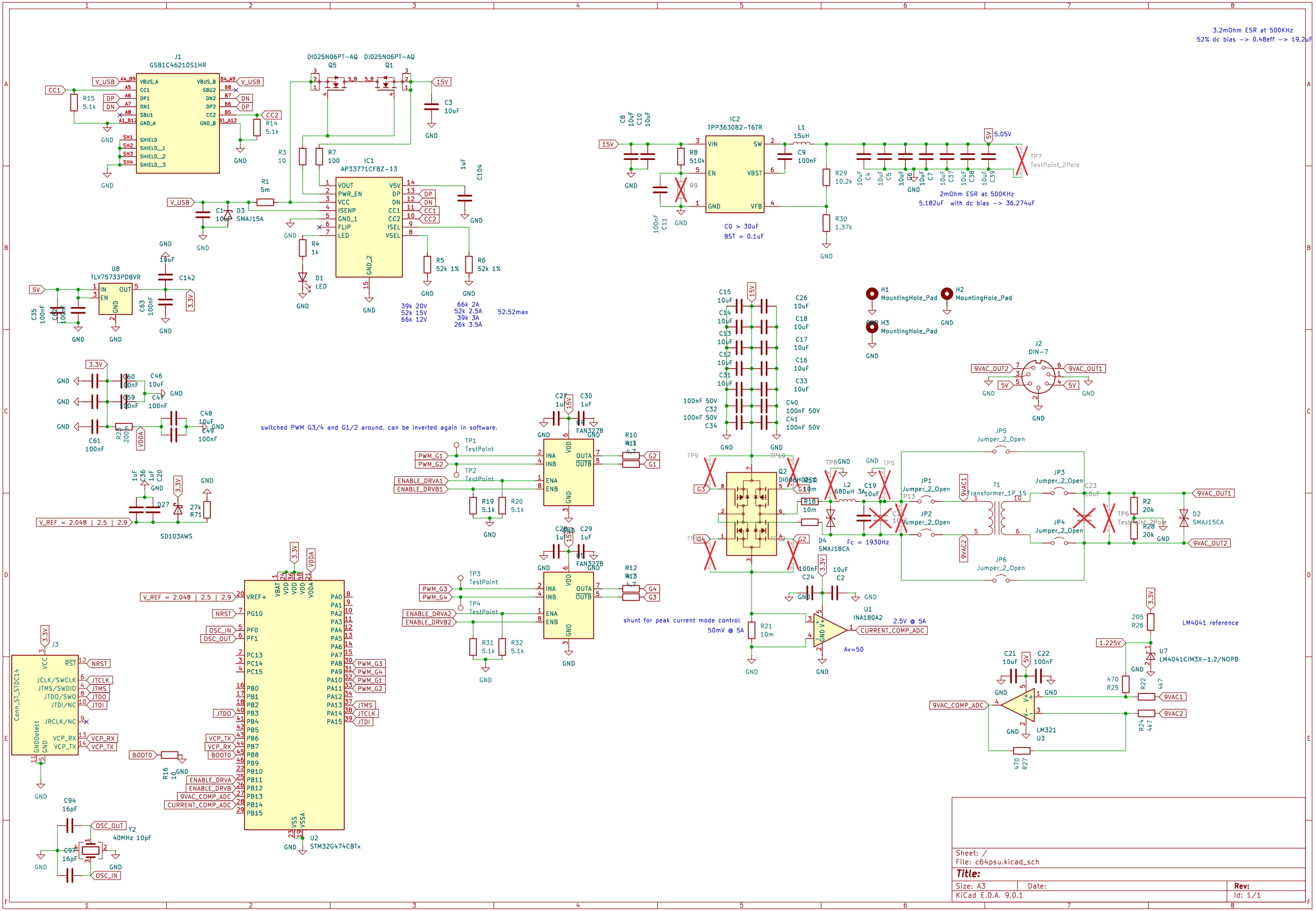
3.2mOhm ESR at 500KHz
52% dc bias -> 0.48eff -> 19.2uF
J1
GSB1C4621DS1HR
DI025N06PT-AQ Q5
DI025N06PT-AQ Q1
IC1
AP33771CFBZ-13
IC2
TPP363082-T6TR
L1
15uH
C0 > 30uF
BST = 0.1uF
2mOhm ESR at 500KHz
5.182uF with dc bias -> 36.274uF
TP7
TestPoint_2Pole
U8
TLV75733PDBVR
39k 20V
52k 15V
66k 12V
66k 2A
52k 2.5A
39k 3A
26k 3.5A
52.52max
H1
MountingHole_Pad
H2
MountingHole_Pad
H3
MountingHole_Pad
J2
DIN-7
9VAC_OUT2
9VAC_OUT1
switched PWM G3/4 and G1/2 around, can be inverted again in software.
FAN3278
JP5
Jumper_2_Open
JP1
JP2
JP3
JP4
JP6
T1
transformer_1P_1S
L2
680uH 3A
Fc = 1930Hz
D4
SMAJ18CA
D2
SMAJ15CA
shunt for peak current mode control
50mV @ 5A
U1
INA180A2
2.5V @ 5A
CURRENT_COMP_ADC
Av=50
LM4041 reference
U7
LM4041CIM3X-1.2/NOPB
LM321
U3
9VAC_COMP_ADC
9VAC1
9VAC2
SD103AWS
V_REF = 2.048 | 2.5 | 2.9
J3
Conn_ST_STDC14
U2
STM32G474CBTx
Y2
40MHz 10pF
Sheet: /
File: c64psu.kicad_sch
Title:
Size: A3
Date:
Rev:
KiCad E.D.A. 9.0.1
Id: 1/1